ChargePoint®
by Coulomb Technologies

ChargePoint Networked Charging Stations

CT2100 FAMILY

ChargePoint® Networked Charging Stations, by Coulomb Technologies, offer municipalities, corporations, fleets, and utilities, high-reliability, plug-in electric vehicle charging that drivers prefer. The easy-to-use stations provide multiple power options, integrating aesthetics and ergonomics with sturdy construction—ideal for residential, commercial and outdoor public applications.

The CT2100 family of charging stations are dual output stations designed for public outdoor applications for the North American marketplace. The 7.2 kW output delivers Level II (208/240 V @ 30 A) charging via a standard SAE J1772™ connector and fixed 18-foot cable. The 2 kW output delivers Level I (120 V @ 16 A) charging via a standard NEMA 5-20 receptacle protected behind a locking door. Both outputs can deliver energy simultaneously.

To eliminate energy theft and to enhance safety, drivers access and energize the station with a ChargePass™ card or contactless credit card. The station's highly visible display guides drivers with instructive messages and can be used to display custom advertisement or greetings for drivers.

ChargePoint Network Enabled

Includes 24/7 driver assistance, station location, station availability, trip mapping, driver billing, and driver notification services. Compatible with remote management, billing, maintenance and other on-demand software applications.

Smart Card Reader

Integrated standards-based RFID reader that accepts ChargePass cards or contactless credit cards. Provides optional driver billing and custom access control, preventing electricity theft and enhancing safety.

Intelligent Power Control

Algorithms ensure power is delivered only when a driver is authorized and the EV connector is properly inserted.

Locking Door

Protects power insertion point and retains the EV charging cord to prevent theft during charging.

Vacuum Florescent Display with Multiple Language Support

Bright, easy-to-read display used for instructive, advertisement and greeting messages in multiple languages.

Integrated Fault Detection

- Ground Fault Detection: Integrated ground-fault detection circuitry with auto retry and driver notification.
- Over-Current Detection: Disconnects power to prevent nuisance breaker trips at service panel. Auto retry and driver notification.
- Plug-Out Detection: Algorithm disengages power and notifies the driver when a plug is removed.
- Charging Complete Detection: Algorithm detects completion of EV charge and notifies the driver.

Over-the-Air Station Upgrade

Upgrade station firmware remotely over-the-air to keep charging station current with future and evolving EV charging needs.

Utility Grade Energy Meter

Integrated power metering circuitry provides accurate bi-directional energy measurement.

Remote Diagnostics and Control

Real-time remote alarm monitoring and control minimizes the need for on-site maintenance.

Network Interface

Wireless mesh and cellular network interfaces allow seamless integration with back office business systems, utility Advanced Metering Infrastructures (AMIs), or home area networks.

Smart Grid Compatible

Utility grade meter and smart-grid interfaces enable demand response and Time-Of-Use (TOU) pricing.

Coulomb Technologies

Coulomb Technologies, Inc.
1692 Dell Ave.
Campbell, CA 95008-6901 USA
US toll free: +1-877-370-3802
www.coulombtech.com
www.mychargepoint.net

Listed by Underwriters Laboratories Inc. c UL us LISTED

ChargePoint®
by Coulomb Technologies

Mechanical Drawings

CT2100 FAMILY

BOLLARD (CT2101)

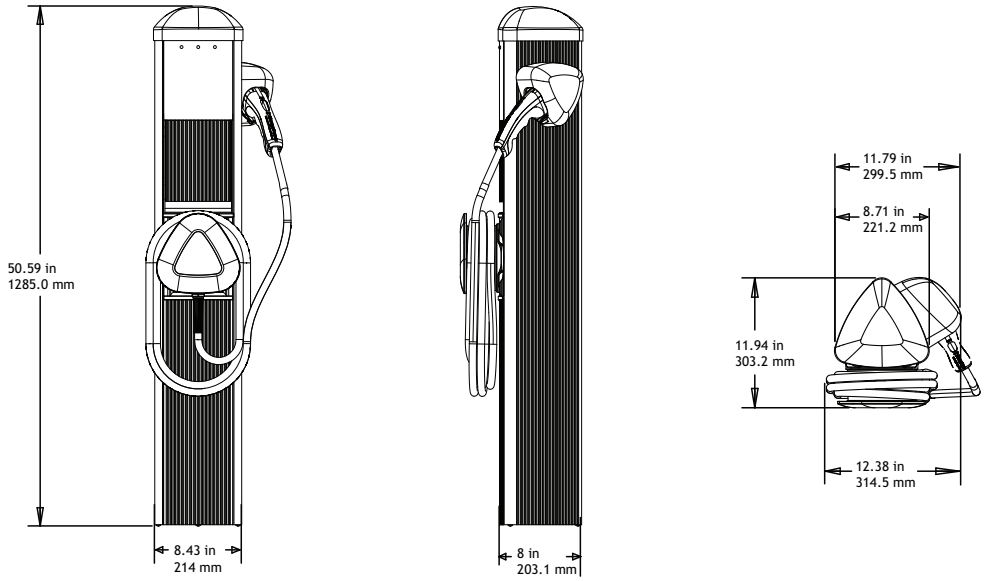

POLE MOUNT (CT2102)

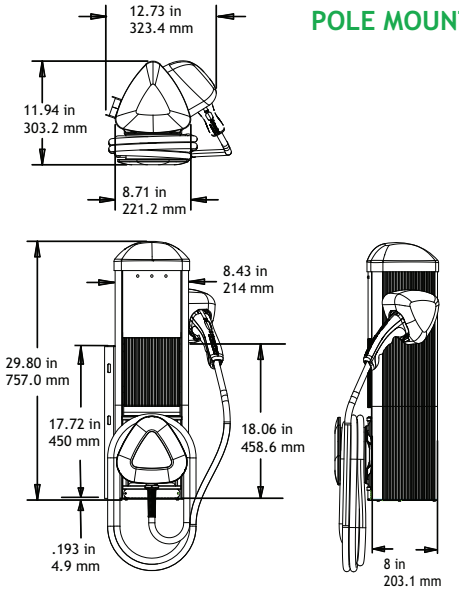

WALL MOUNT (CT2103)

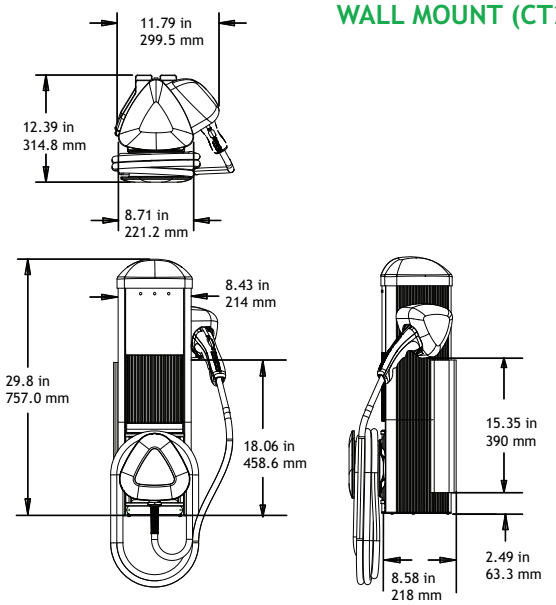

Listed by Underwriters Laboratories Inc. c UL us LISTED

ChargePoint®
by Coulomb Technologies

Specifications

CT2100 FAMILY

Electrical Input	Level I	Level II
Input Power	2.0 kW	7.2 kW
Input Voltage	120 VAC	208/240 VAC
Input Current	16 A	30 A
Input Power Connections	Line, Neutral, Earth	Line 1, Line 2, Earth
Required Service Panel Breaker	20 A single pole breaker (non-GFCI type) on dedicated circuit	40 A double pole breaker (non-GFCI type) on dedicated circuit
Standby Power	5 W typical	

Electrical Output		
Output Charging Power	2.0 kW	7.2 kW
Output Voltage	120 VAC	208/240 VAC
Output Current	16 A	30 A
Output Charging Connector	NEMA 5-20 receptacle	SAE J1772™ EV connector on 18' (5.48 m) cable

Functional Interfaces		
Card Reader	ISO 15693, 14443	
Ground Fault Detection	5 mA CCID with auto retry (15 minute delay, 3 tries)	20 mA CCID with auto retry (15 minute delay, 3 tries)
Plug-Out Detection	Programmable arm and trip current thresholds	Power terminated per SAE J1772™ specification
Power Measurement	2% @ 15 minute intervals	
Local Area Network	2.4 GHz 802.15.4 dynamic mesh network	
Wide Area Network	Commercial CDMA or GPRS cellular data network	

Safety and Operational Ratings	
Safety Compliance	UL Listed for USA and cUL certified for Canada; Complies with UL 2594, UL 2231-1, UL 2231-2, UL 1998, UL 991, NEC Article 625
Surge Protection	6 kV @ 3,000 A. In geographic areas subject to frequent thunderstorms, supplemental surge protection is recommended.
EMC Compliance	FCC Part 15 Class A
Operating Temperature	-22°F to 122°F (-30°C to +50°C)
Operating Humidity	95% non-condensing
Enclosure	NEMA 3R
Terminal Block Temperature Rating	212° F (100°C)
Maximum Charging Stations per 802.15.4 Radio Group	100. Each station must be within 150 feet "line of sight" of at least one other station
Approximate Shipping Weights	Bollard (CT2101) 77 lbs (34 kg) Pole Mount (CT2102) 52 lbs (23 kg) Wall Mount (CT2103) 55 lbs (25 kg)

Coulomb Technologies, Inc. reserves the right to alter product offerings and specifications at any time without notice, and is not responsible for typographical or graphical errors that may appear in this document.

Listed by Underwriters Laboratories Inc. c UL us LISTED

ChargePoint®
by Coulomb Technologies

Ordering Information

CT2100 FAMILY

BOLLARD (CT2101)

POLE MOUNT (CT2102)

WALL MOUNT (CT2103)

Ordering Information

Specify model number followed by the applicable code(s). The order code sequence is:

Model-Modem-SIM-Holster-Card Reader-Warranty

Option	Order Code
Model	
Bollard Mount	CT2101
Pole Mount	CT2102
Wall Mount	CT2103
Modem	
Integral CDMA ChargePoint Gateway Modem	-CDMA
Integral GPRS ChargePoint Gateway Modem	-GPRS
SIM	
USA GPRS SIM	-SIM1
Canada GPRS SIM	-SIM2
Holster	
Locking Holster	-LOCK
Card Reader	
Contactless Credit Card Reader	-CCR
Warranty	
5 Year Parts Only Extended Warranty	-EW5
5 Year Parts Only Extended Warranty - Gateway	-EW5GW

Order Code Examples

If ordering this	The order code would be
Pole Mount	CT2102
Bollard Mount with CDMA Gateway	CT2101-CDMA
Bollard Mount with GPRS Gateway and Canada GPRS SIM	CT2101-GPRS-SIM2
Wall Mount with USA GPRS Gateway, Contactless Credit Card Reader and 5 year extended parts warranty	CT2103-GPRS-SIM1-CCR-EW5GW

For pricing and additional product information, contact the distributor in your area. For a complete list of distributors, go to www.coulombtech.com and click Purchase.

Coulomb Technologies, Inc. - 1692 Dell Ave. - Campbell, CA 95008-6901 USA
408.841.4500 - 877.370.3802 - info@coulombtech.com
www.coulombtech.com - www.mychargepoint.net

Listed by Underwriters Laboratories Inc. c UL us LISTED

Copyright © 2010 Coulomb Technologies, Inc. All rights reserved. CHARGEPOINT is a U.S. registered trademark/service mark, and an EU registered logo mark of Coulomb Technologies, Inc. All other products or services mentioned are the trademarks, service marks, registered trademarks or registered service marks of their respective owners. Coulomb Technologies has several patent applications filed.